Project Name:	
Catalog Number:	Fixture Type:
Volts/Watts:	Lamps/Board:

LARGE FLOOD - 80W/60W LED

OUTDOOR LIGHTING

FEATURES

- Dual Wattage Selection - 80W or 60W
- Hinged Front Frame for Easy Tool-less Access to Rocker Switch and Ballast
- Die Cast Aluminum Housing
- Textured Architectural Bronze Powdercoat Finish
- Dimple Textured Diffusive Tempered Glass Lens
- Watertight Cord Grip Installed
- Standard Yoke Included
- Pole and Tenon Mounting Options Also Available (3' Cord and Watertight Bushing Included)
- 4000K (Std)
- Rated for Outdoor Use
- 5 Year Warranty
- IP65 Rating
- DesignLights Consortium® Qualified [2]

REPLACES 150W-250W MH

LED SYSTEM

	80W System	60W System
Calculated L_{70} (TM-21)	**73,000 hours**	**73,000 hours**
Delivered Lumens	**6,197 lm**	**5,212 lm**
Total Input Watts	**76.5 W**	**62.4 W**
Luminaire Efficacy Rating (LER)	**81.8 lm/W**	**83.5 lm/W**
Correlated Color Temperature (CCT)	**4000 K**	**4000 K**
Color Rendering Index (CRI)	**> 80**	**> 80**
Max Ambient Temp	**110˚ F**	**110 ˚ F**
Universal Driver	**120-277 V**	**120-277 V**

LED System data above based on FLL-80WLED-UNIV-4000K & FLL-60WLED-UNIV-4000K
[1] LED Lumen Maintenance Estimates based on TM-21 projections for the light source at 25˚C ambient
[2] Specific Configurations Listed on DLC.

SUITABLE APPLICATIONS

- Parking lots
- Buildings
- General area lighting

complies with **RoHS**

Ordering Guide

Part Number	Full Description
☐ **FLL-80W/60WLED-UNIV-4000K**	**Large Flood with Yoke, 80W/60W, 120V-277V, 4000K Color Temp**

Options	
☐ **PMB**	Pole Mount Bracket (3' cord & bushing incl.)
☐ **TMB**	Tenon Mount Bracket (3' cord & bushing incl.)
☐ **CORDx**	Cord (X = ft)
☐ **PCxxx**	Photocell (xxx = Voltage)
☐ **GS**	Glare Shield
☐ **WG**	Wire Guard
☐ **SP1**	Surge Protector - 120V
☐ **SP2**	Surge Protector - 277V

LARGE FLOOD - 80W/60W LED

OUTDOOR LIGHTING

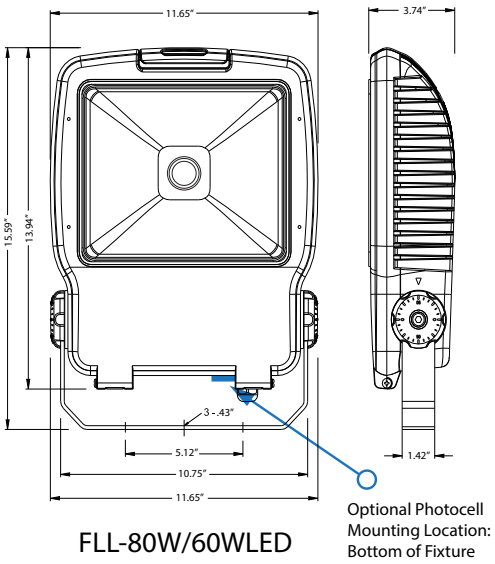

FLL-80W/60WLED

Features a hinged front frame for easy tool-less access to the rocker switch to convert the output Watts to either 80W or 60W, depending on your particular needs.

MOUNTING OPTIONS

- Standard Yoke Included
  (EPA Rating: 1.36ft² Vertically / 0.61ft² Horizontally)

Also Available:

- Pole Mounting Bracket (PMB)
  - Includes 3 ft cord and watertight bushing
  (EPA Rating: 1.42ft² Vertically / 0.67ft² Horizontally)
- Tenon Mounting Bracket (TMB) 2 $^{3}/_{8}$ Pole Only
  - Includes 3 ft cord and watertight bushing
  (EPA Rating: 1.43ft² Vertically / 0.68ft² Horizontally)

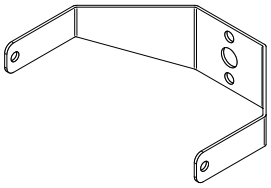

PMB

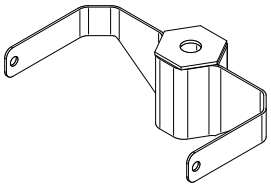

TMB

OPTIONS

WG
Wire Guard

GS
Glare Shield

Optional mounting brackets are ship-with accessories

FLL-80WLED-UNIV-4000K

LUMINAIRE OUTPUT = 6,197 LM
120.0V 1.771A 76.5W PF= 0.969

SUMMARY DATA

HEMISPHERES TESTED:	LOWER
EFFICIENCY (Total):	100.1 %
EFFICIENCY (Street / House):	49.6 % / 50.5 %
ROADWAY CLASSIFICATION:	TYPE VS
CUTOFF CLASSIFICATION:	CUTOFF
LUMENS/LAMP:	6201.8
NO. OF LAMPS:	1
LUMINOUS OPENING: RECTANGULAR	
Width:	0.00 (Feet)
Length:	0.00
Height:	0.00
INPUT WATTS:	75.9

PLANE AND CONE DIAGRAM

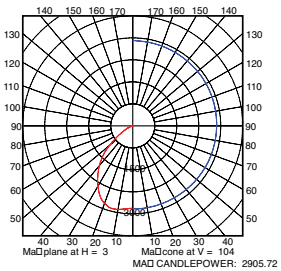

Photometric values based upon tests performed in compliance with LM-79. IES files can be downloaded at www.ilp-inc.com

LED lighting facts®
Industrial Lighting Products
A Program of the U.S. DOE

Light Output (Lumens)	6197
Watts	75.79
Lumens per Watt (Efficacy)	81
Color Accuracy Color Rendering Index (CRI)	81
Light Color Correlated Color Temperature (CCT)	4069 (Bright White)

Warm White | Bright White | Daylight
2700K 3000K 4500K 6500K

All results are according to IESNA LM-79-2008: *Approved Method for the Electrical and Photometric Testing of Solid-State Lighting.* The U.S. Department of Energy (DOE) verifies product test data and results.

Visit www.lightingfacts.com for the *Label Reference Guide.*

Registration Number: -ZLNGPK (12/9/2013)
Model Number: FLL-80WLED-UNIV-4000K
Type: Luminaire - Directional

FLL-60WLED-UNIV-4000K

LUMINAIRE OUTPUT = 5212 LM
120.0V 0.5249A 62.5W PF=0.9914

SUMMARY DATA

HEMISPHERES TESTED:	LOWER
EFFICIENCY (Total):	100.0 %
EFFICIENCY (Street / House):	50.2 % / 49.8 %
ROADWAY CLASSIFICATION:	TYPE VS
CUTOFF CLASSIFICATION:	CUTOFF
LUMENS/LAMP:	5156.851
NO. OF LAMPS:	1
LUMINOUS OPENING: RECTANGULAR	
Width:	0.00 (Feet)
Length:	0.00
Height:	0.00
INPUT WATTS:	62.5

PLANE AND CONE DIAGRAM

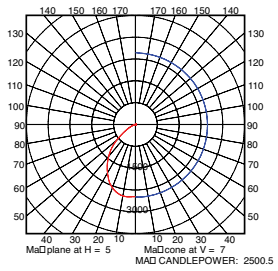

Photometric values based upon tests performed in compliance with LM-79. IES files can be downloaded at www.ilp-inc.com

LED lighting facts®
Industrial Lighting Products
A Program of the U.S. DOE

Light Output (Lumens)	5212
Watts	62.42
Lumens per Watt (Efficacy)	83
Color Accuracy Color Rendering Index (CRI)	81
Light Color Correlated Color Temperature (CCT)	4077 (Bright White)

Warm White | Bright White | Daylight
2700K 3000K 4500K 6500K

All results are according to IESNA LM-79-2008: *Approved Method for the Electrical and Photometric Testing of Solid-State Lighting.* The U.S. Department of Energy (DOE) verifies product test data and results.

Visit www.lightingfacts.com for the *Label Reference Guide.*

Registration Number: -FEX6C4 (1/14/2014)
Model Number: FLL-60WLED-UNIV-4000K
Type: Luminaire - Directional